Getting started with TinkerCad For 3D Modeling & 3D Printing

Instructions complied by Wendy Aracich
waracich@gmail.com // ArtTeacherWendy.blogspot.com

Setting Up a TinkerCad Account

1. Go to www.tinkercad.com
2. Click on "Sign Up" (*Image 1)*
3. Follow instructions to set up an account, or multiple accounts. You will need an active email address for each TinkerCad account you want to set up.
4. Log in to your TinkerCad account.
5. Click on "Create new design" to start a project

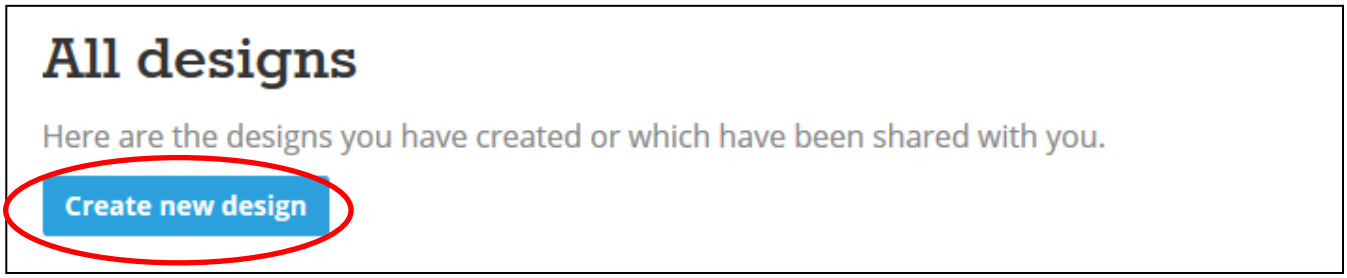

6. Tip: TinkerCad has some great tutorials. Click on the "Learn" link at the top of the screen if you want to try out the tutorials.

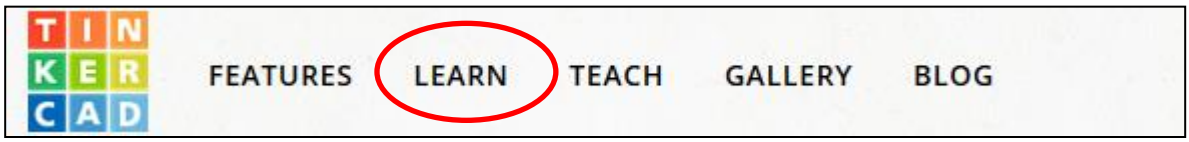

Modeling with TinkerCad

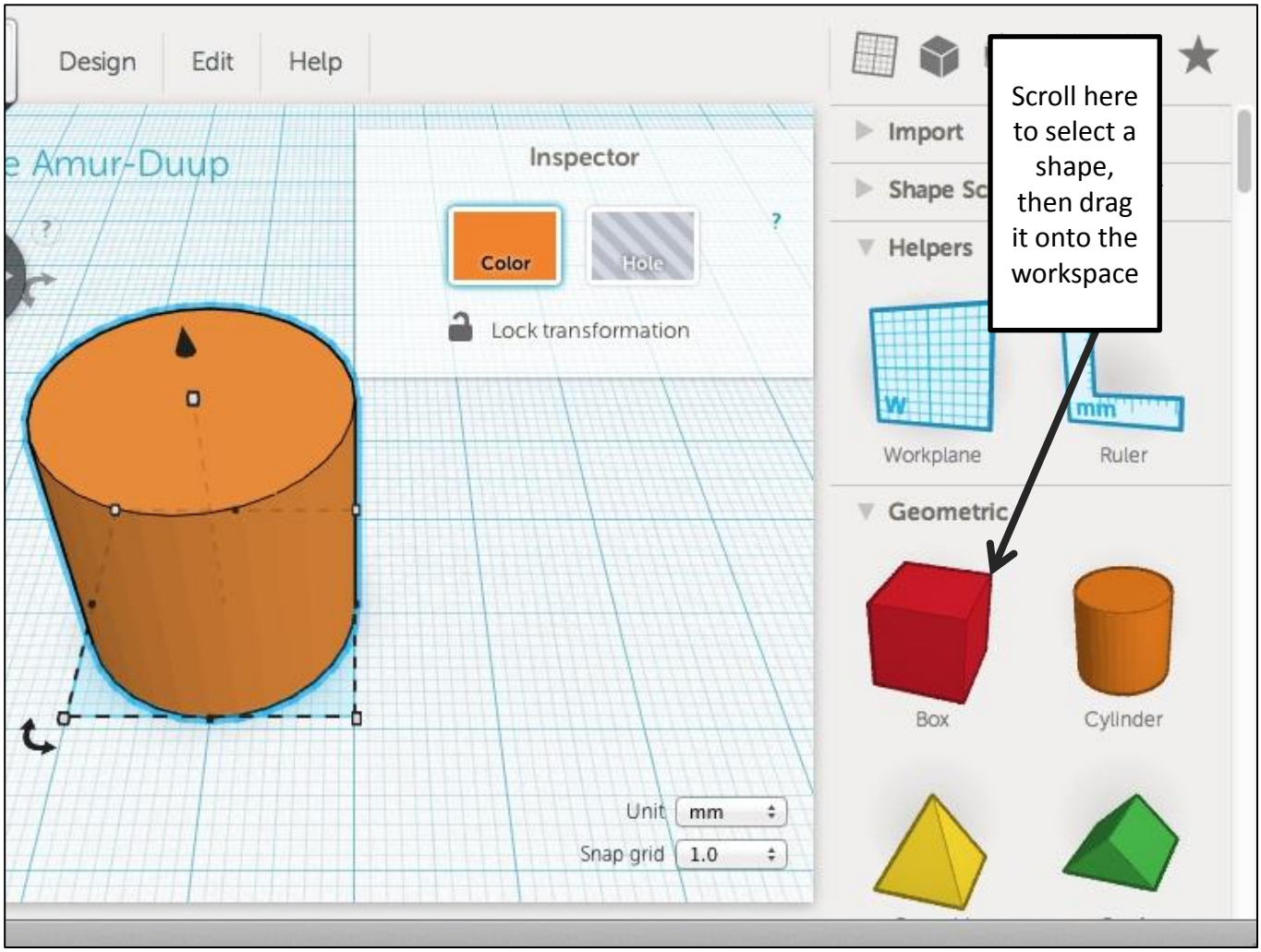

Modeling with TinkerCad

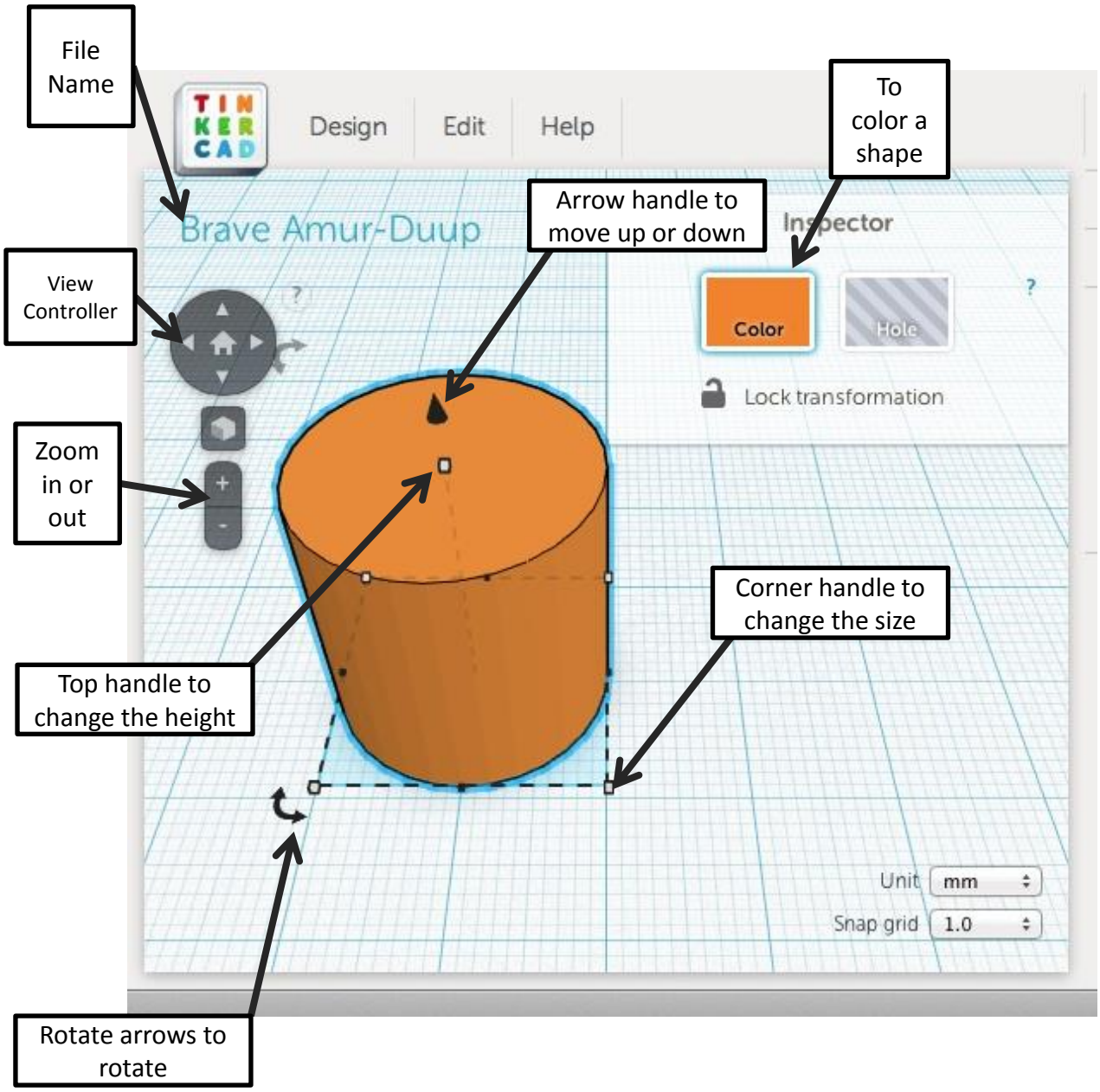

Editing Projects in TinkerCad

1. Go to www.tinkercad.com

2. Click on “Sign In” (*Image 1)*

3. Enter user name and password

4. Scroll down and locate project, making sure to match project name exactly. The project name is displayed under the project image. (*Image 2)*

5. Mouse over the image, and click on “Tinker This” (*Image 3)*

6. The project can now be edited

7. When finished, save the project again by clicking on “Design” and then “Save”

8. Students who were not preset on day 1 will be given log in information. After they sign in to TinkerCad, they will select “Create New” (*Image 4)*

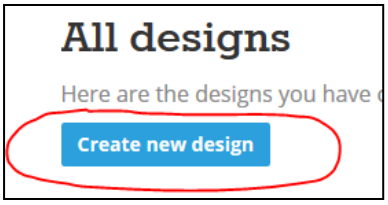

TinkerCad Instructions
Day 2: Finishing the Robots

1. If a student has finished, have them check their robots to make sure there is no visible space between their shapes. They will do this by rotating their workspace (hold in right mouse button and drag the mouse). If they see space, the will need to fix it. **Make sure they rotate side to side as well as up and down.**

2. If a student has finished and their project is satisfactory, they can move on to creating a world for their robot using the geometric shapes and following the same steps as before.

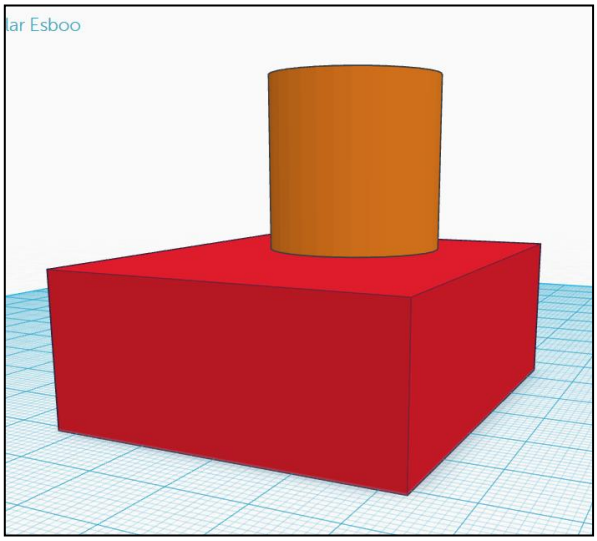

Looks good from this angle!

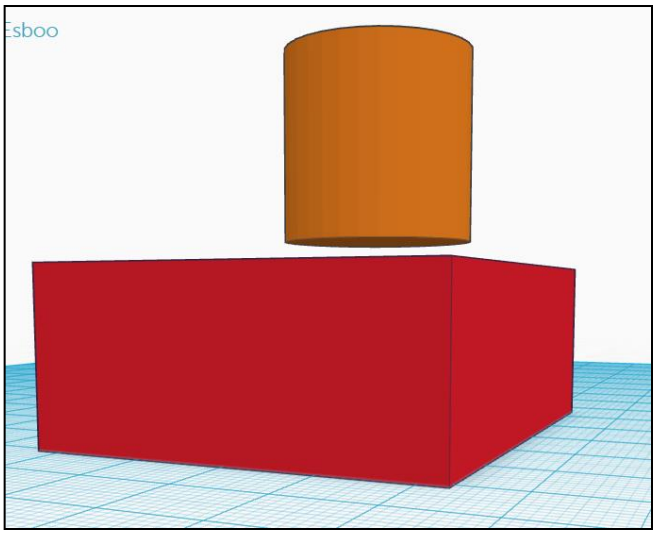

Woops- there's still some space!

TinkerCad Tips

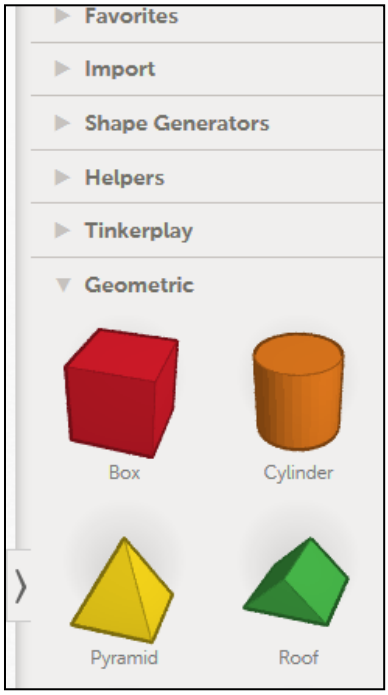

1. Students should be getting the majority of their objects from the “Geometric” menu

2. Students will drag shapes into the workspace to create with them

3. To delete, click on a shape to select it and press delete on the keyboard

4. The box-shaped handles on each shape are used to scale the shape. The double-sided arrows rotate the shape, and the black triangle at the top is used to move the shape up and down

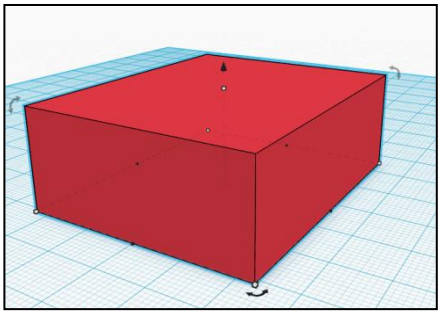

5. Students can select more than one shape by either drawing a box around them (clicking and dragging the mouse) OR by holding SHIFT while clicking on the shapes.

6. Students can “lock” a shape by selecting it and then clicking on the lock in the “Inspector” panel. This will prevent them from accidently grabbing the shape. This will be most helpful to students with lots of shapes being used in their project. To unlock, they would select the shape and click the lock again.

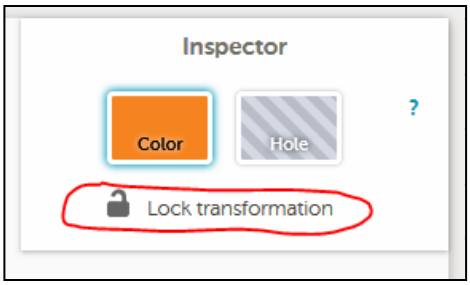

TinkerCad Troubleshooting

1. If a student is having difficulty resizing or rotating, they should adjust their view so they can see the handles better. They can do this by dragging the mouse while holding down the right mouse button. They may also need to zoom in to better see the handles. They can do this by rolling the mouse wheel. *(Image 1)*

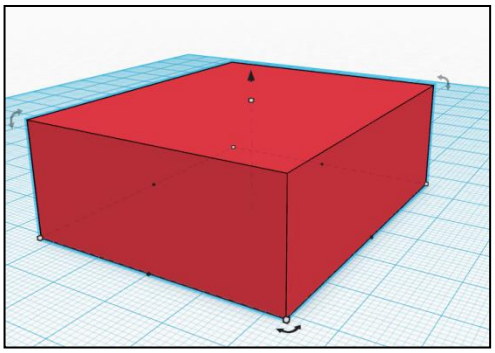

2. If TinkerCad appears to freeze, the student can click on the TinkerCad logo to return to the main page, and then re-load their project. In most cases, changes will have been saved. *(Image 2)*

3. If students are having problems aligning their shapes, remind them to use the arrow keys on the keyboard. They may also want to set Snap grid to "off" to all more precise movements. *(Image 3)* Also, they can use the object's shadow as a guide *(Image 4)*

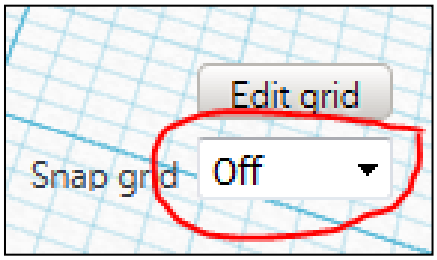

4. If a student's shape is striped, this means they have set it as a hole by accident. *(Image 5)* It will not print if it's a hole. Have them change it back to a color by clicking on color and selecting a color. *(Image 6)*